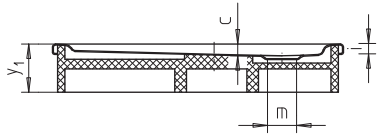


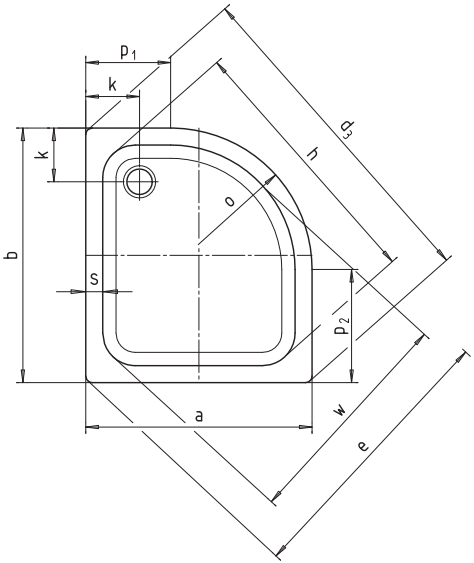


| | 501 | 603 | 605 | 502 | 601 | 602 | |
|---|---|---|---|---|---|---|---|
| **a** | 900 | 900 | 1000 | 750 | 800 | 800 | mm |
| **b** | 750 | 800 | 800 | 900 | 900 | 1000 | mm |
| **c** | 35 | 35 | 35 | 35 | 35 | 35 | mm |
| **$d_3$** | 1155 | 1185 | 1262 | 1155 | 1185 | 1262 | mm |
| **e** | 964 | 990 | 1075 | 964 | 990 | 1075 | mm |
| **h** | 910 | 940 | 1020 | 910 | 940 | 1020 | mm |
| **i** | 32 | 32 | 32 | 32 | 32 | 32 | mm |
| **k** | 190 | 190 | 190 | 190 | 190 | 190 | mm |
| **m** | 90 | 90 | 90 | 90 | 90 | 90 | mm |
| **o** | 500 | 500 | 500 | 500 | 500 | 500 | mm |
| **$p_1$** | 400 | 400 | 500 | 250 | 300 | 300 | mm |
| **$p_2$** | 250 | 300 | 300 | 400 | 400 | 500 | mm |
| **s** | 60 | 60 | 60 | 60 | 60 | 60 | mm |
| **w** | 792 | 812 | 903 | 792 | 812 | 903 | mm |
| **$y_1$** | 130 | 130 | 130 | 130 | 130 | 130 | mm |
| | 17 | 19 | 21 | 17 | 19 | 21 | mm |
| | ∅ 435 | ∅ 435 | ∅ 435 | ∅ 435 | ∅ 435 | ∅ 435 | mm |