RIHO

S308 & M308

IW00050.6
Art.no.: IW00050

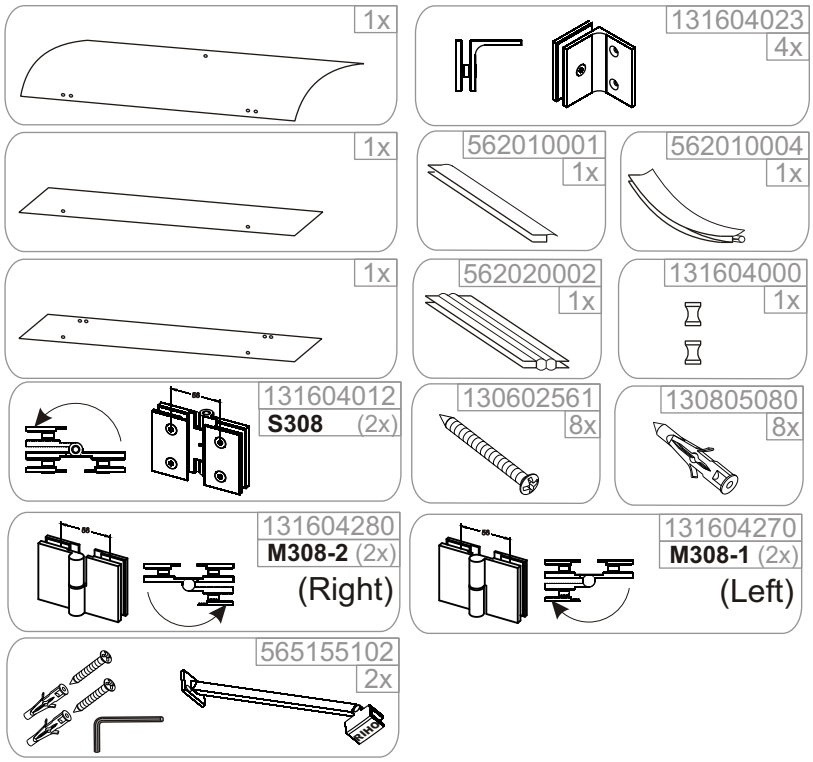

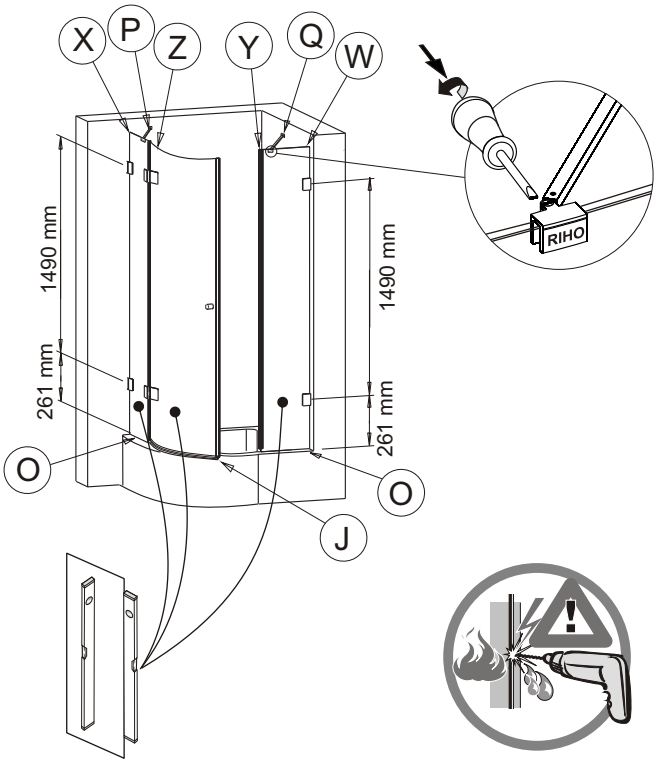

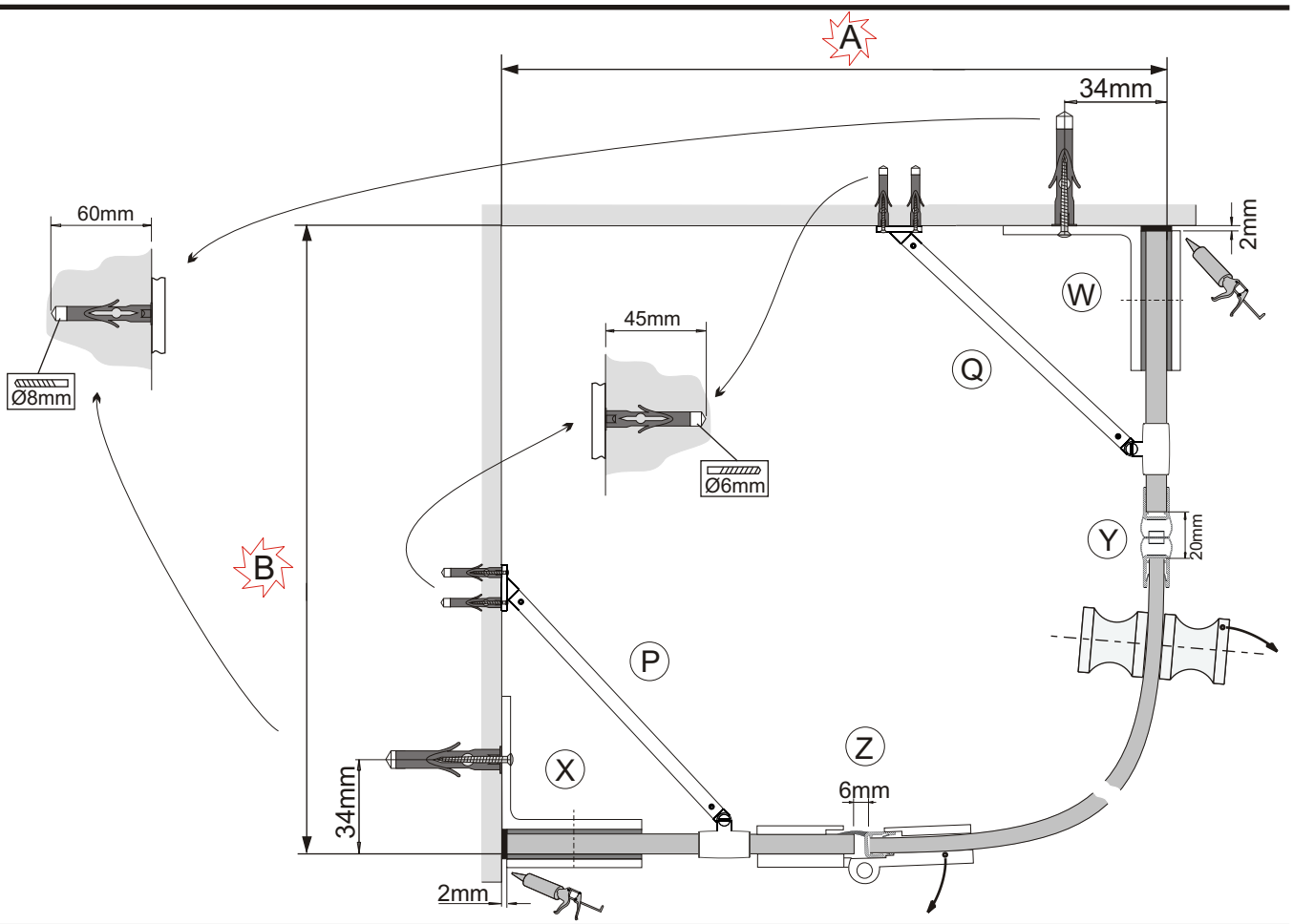

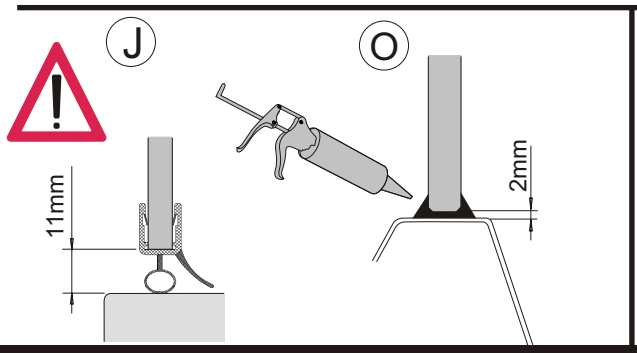

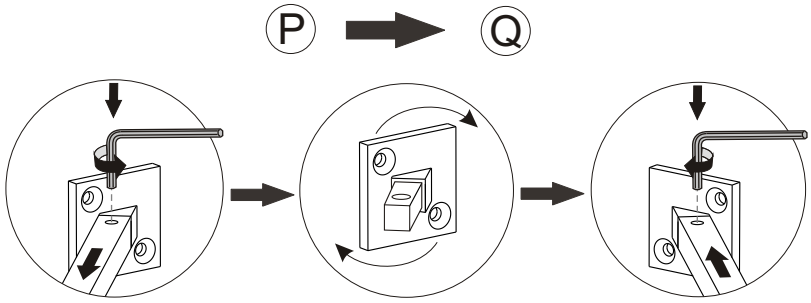

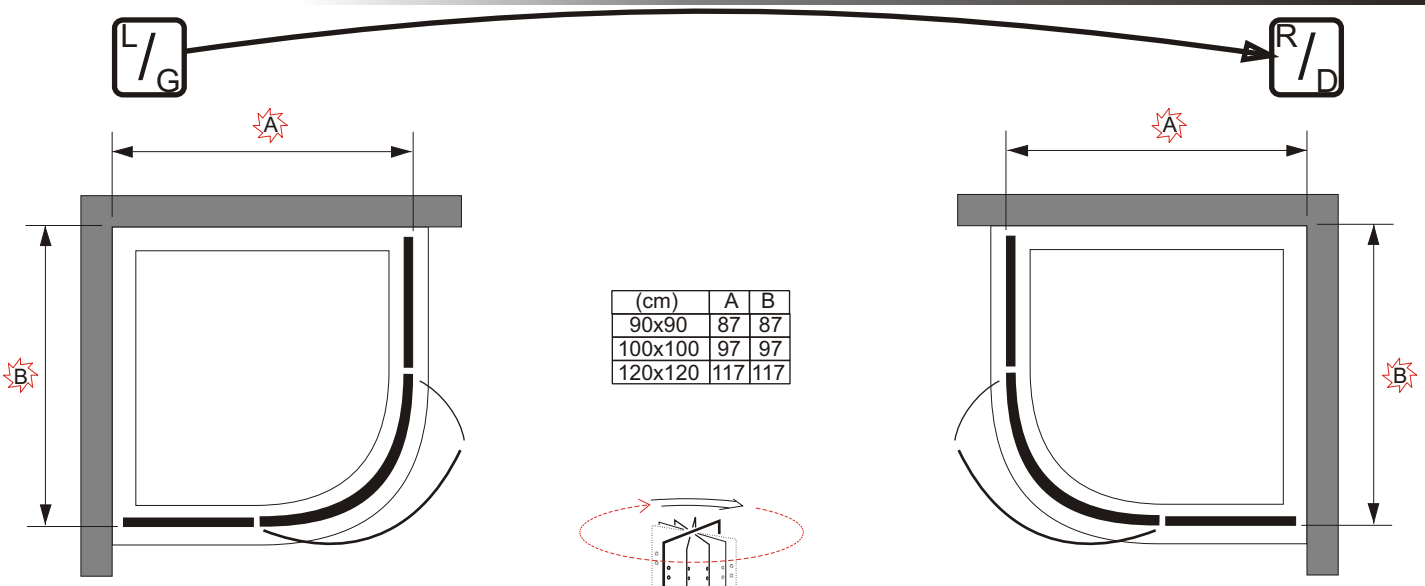
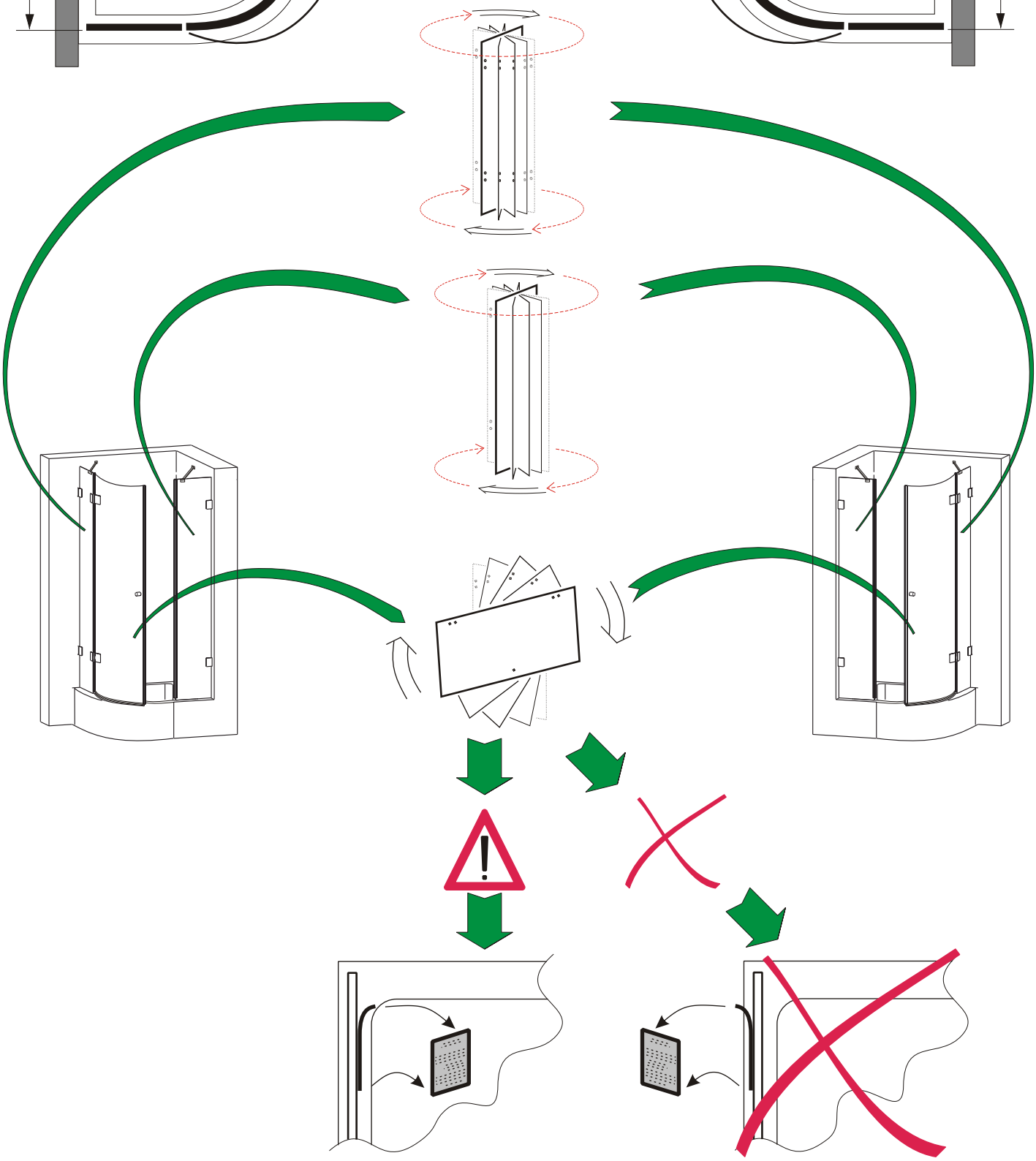
(cm)	A	B
90x90	87	87
100x100	97	97
120x120	117	117