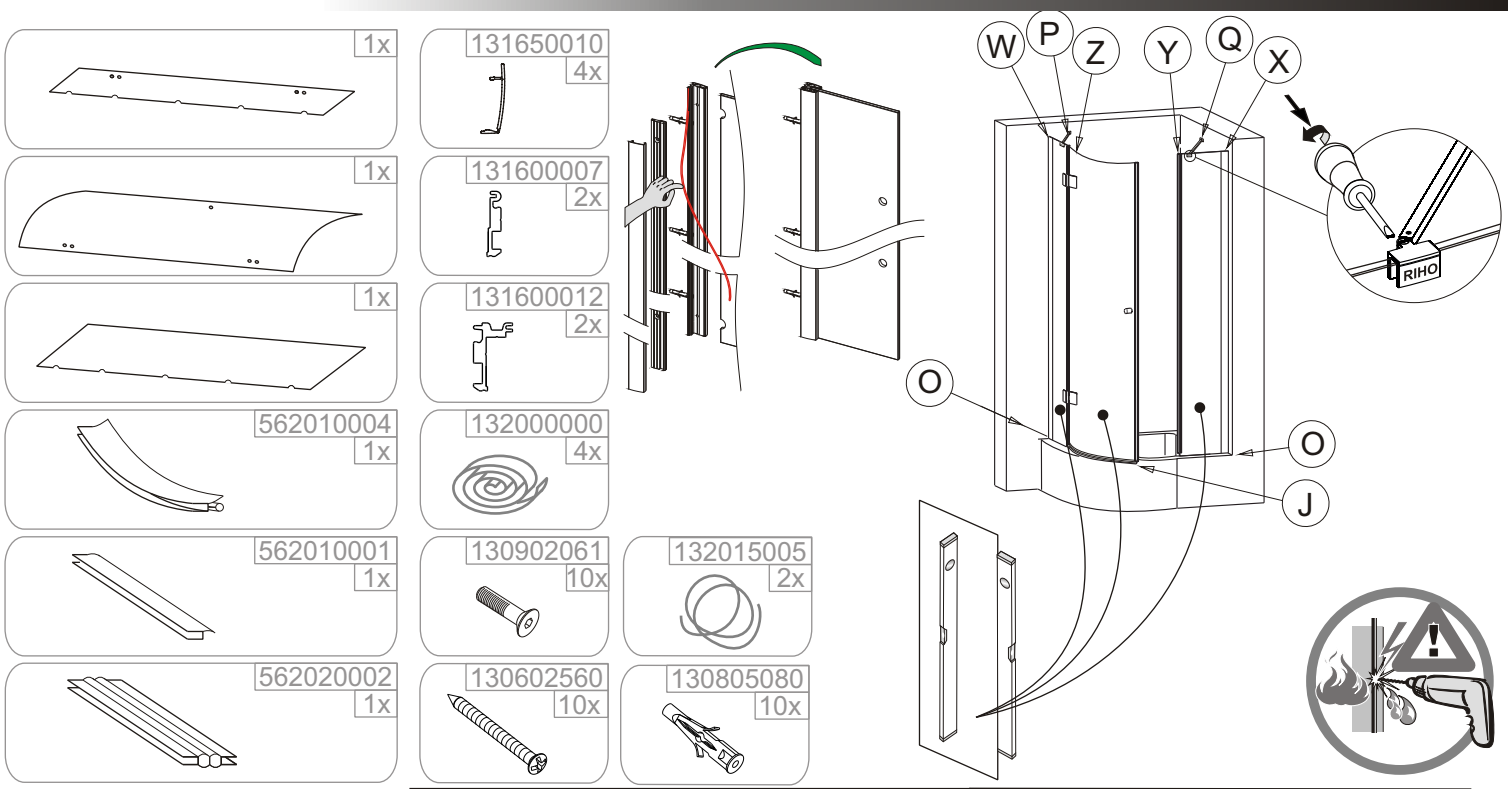
1x
131650010
4x
1x
131600007
2x
1x
131600012
2x
562010004
1x
132000000
4x
562010001
1x
130902061
10x
132015005
2x
562020002
1x
130602560
10x
130805080
10x
W
P
Z
Y
Q
X
O
O
J
RIHO

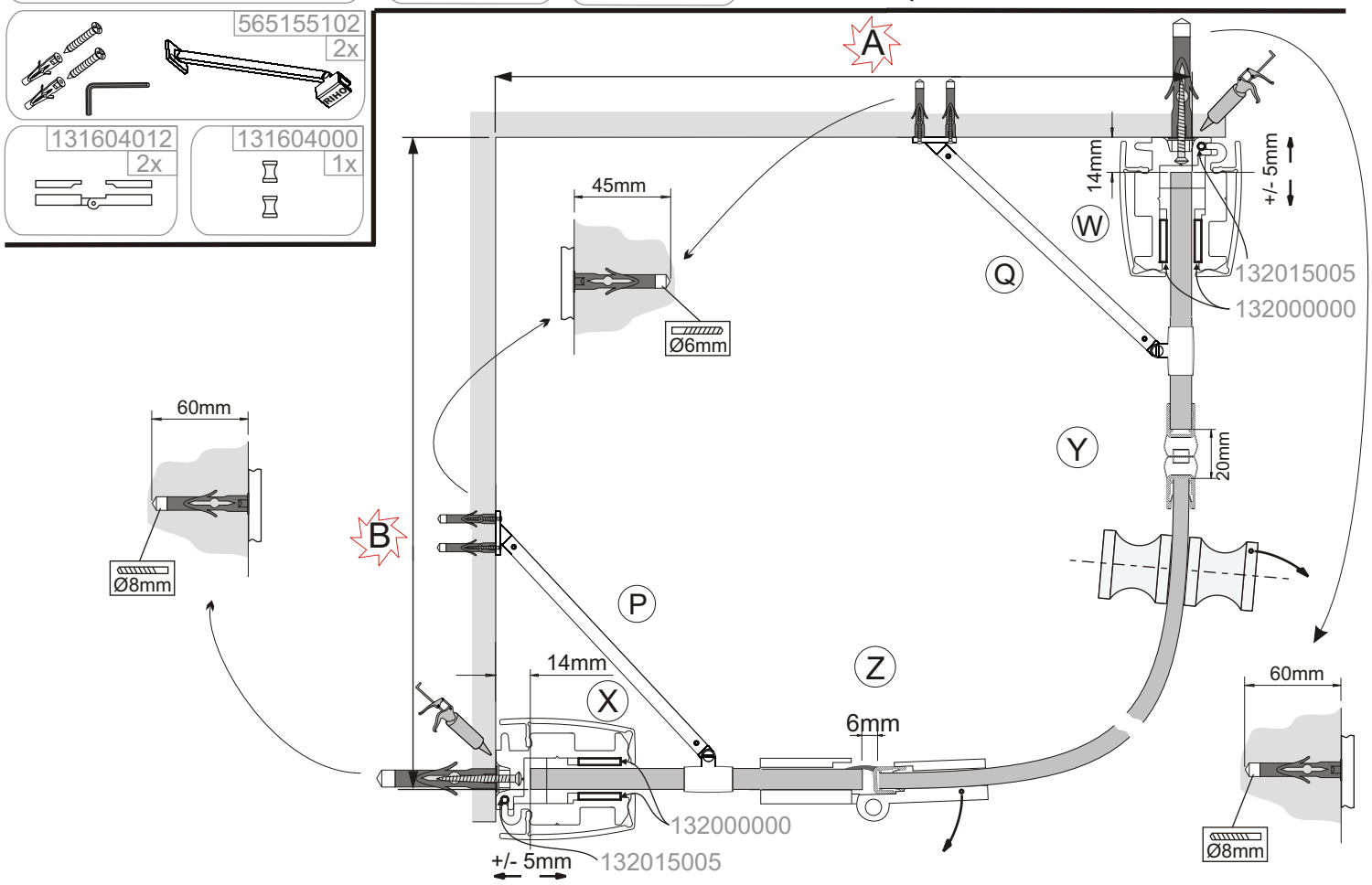
565155102
2x
131604012
2x
131604000
1x
A
B
45mm
Ø6mm
60mm
Ø8mm
14mm
+/- 5mm
W
Q
132015005
132000000
Y
20mm
P
Z
X
14mm
6mm
132000000
+/- 5mm
132015005
60mm
Ø8mm

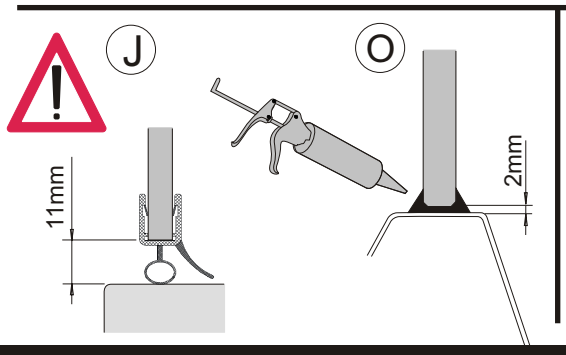
J
O
11mm
2mm

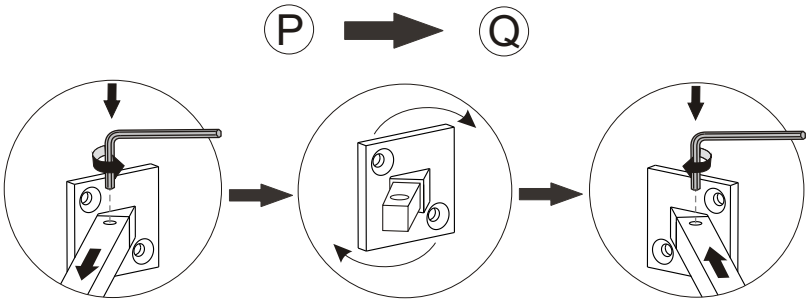
P
Q

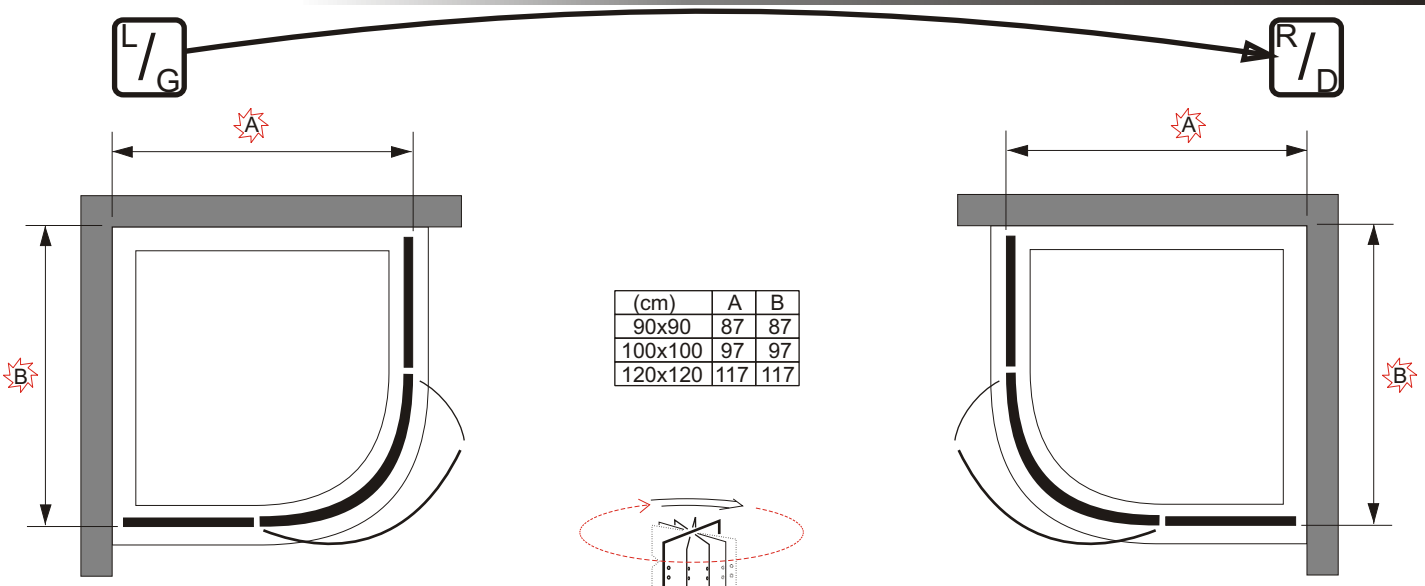
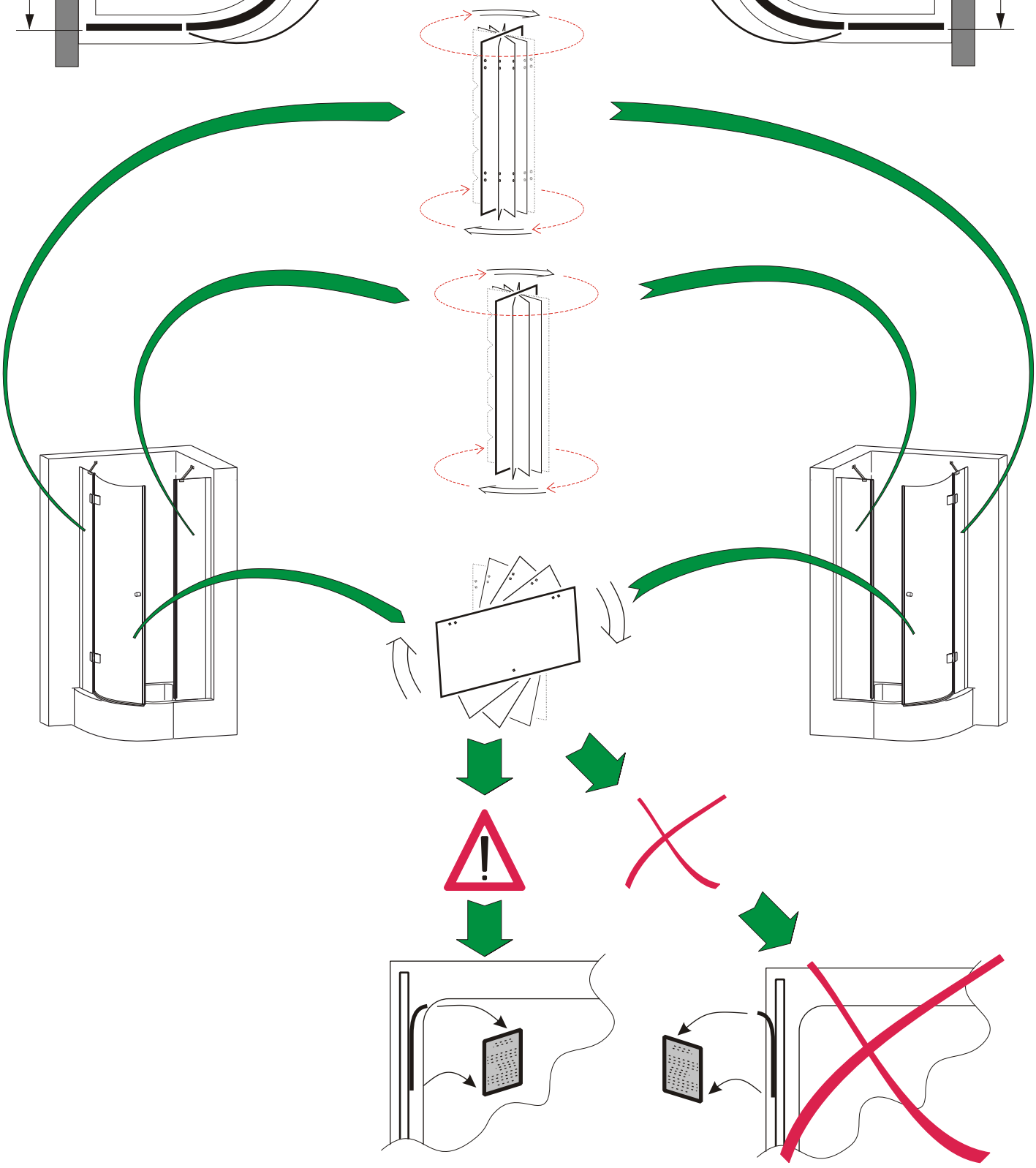
(cm)	A	B
90x90	87	87
100x100	97	97
120x120	117	117